StealthNet™

Installation Guide

Kit Includes:

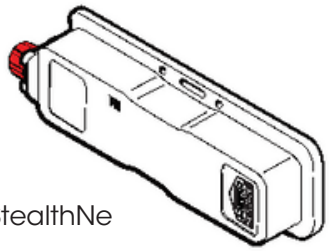

StealthNet Gateway

ABS Power Harness

Four (4) Cable Ties

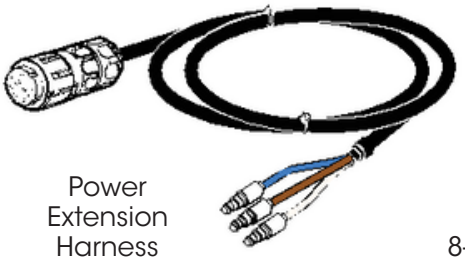

Power Extension Harness

Two (2) Stainless Steel Buttonhead Torx Screws, 8-32 Thread Size, 1 1/4" Long

Two (2) 18-8 Stainless Steel Serrated Flange Locknut, 8-32 Thread Size

Tool List:

Cordless Drill

3/16" Drill Bit

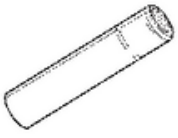

11/32" Deep Socket

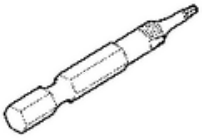

1-T15 Torx Drive

Tape Measure

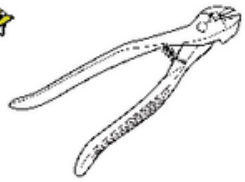

Side Cutter

StealthNet is installed in the trailer or chassis bogie area.

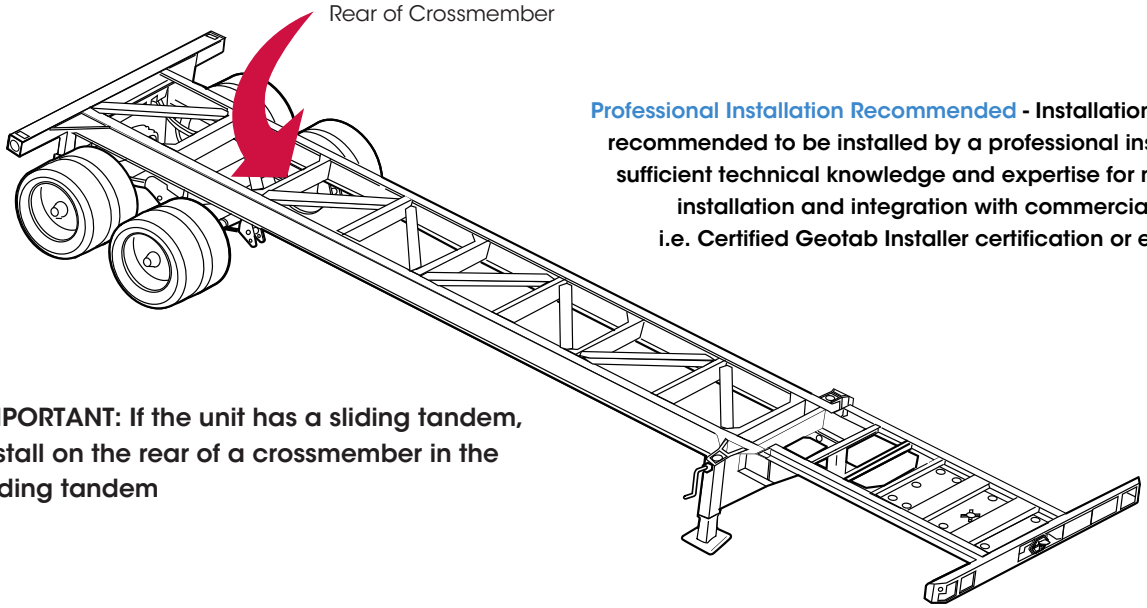

Professional Installation Recommended - Installation of StealthNet is recommended to be installed by a professional installer that has sufficient technical knowledge and expertise for mobile device installation and integration with commercial assets.
i.e. Certified Geotab Installer certification or equivalent.

IMPORTANT: If the unit has a sliding tandem, install on the rear of a crossmember in the sliding tandem

1. Mount at least 2 inches from the frame rail so the StealthNet Gateway has a clear view to the ground.

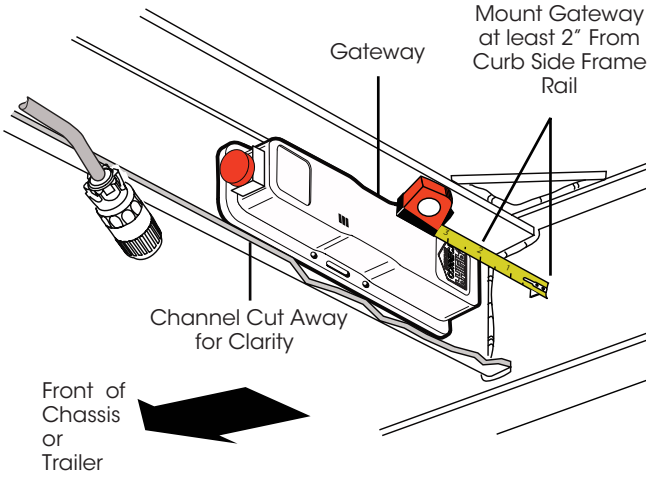

2. Using the StealthNet Gateway as a template, mark and drill two (2) 3/16" holes as shown.

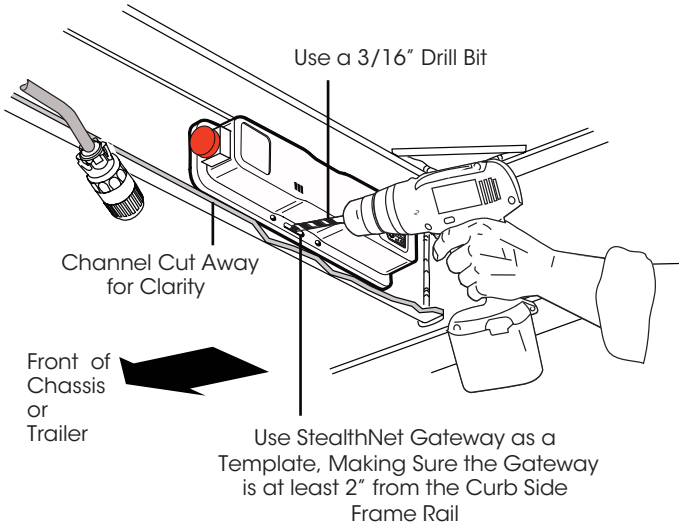

3. Insert supplied 8-32 button head screws from the front side and secure with 8-32 serrated flange nuts.

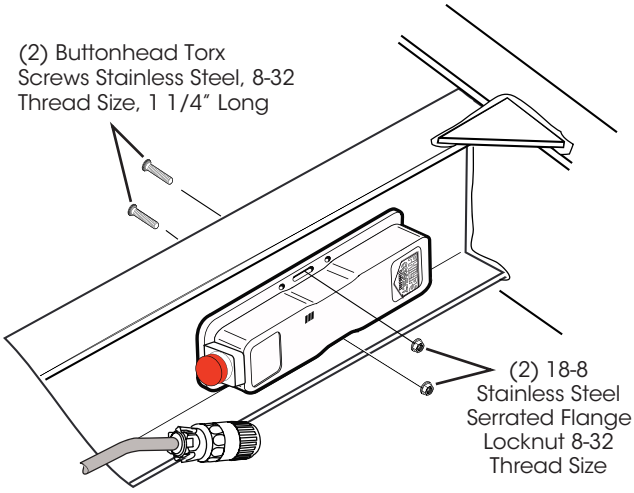

4. Plug in the Power Extension Harness to the StealthNet Gateway.

IMPORTANT: Insert the connector and turn ¼ turn clockwise until it clicks into place.

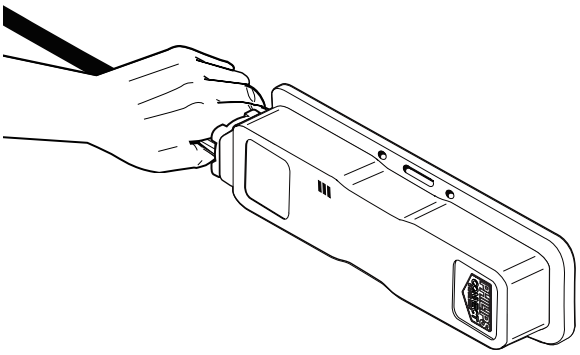

5. Locate the ABS TTMA 5 pin connector and unplug it from the main harness.

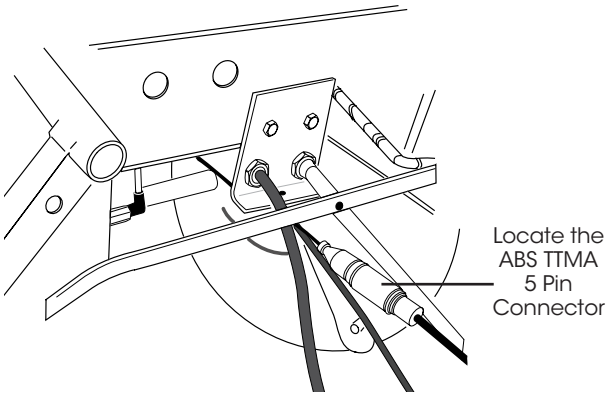

6. Plug in the ABS Extension Harness.

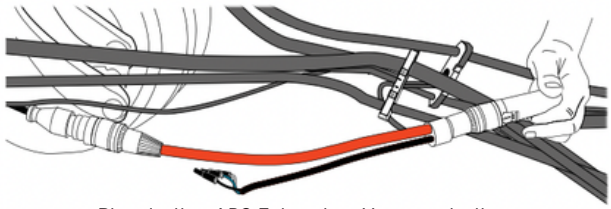

Plug in the ABS Extension Harness in the Middle as Shown

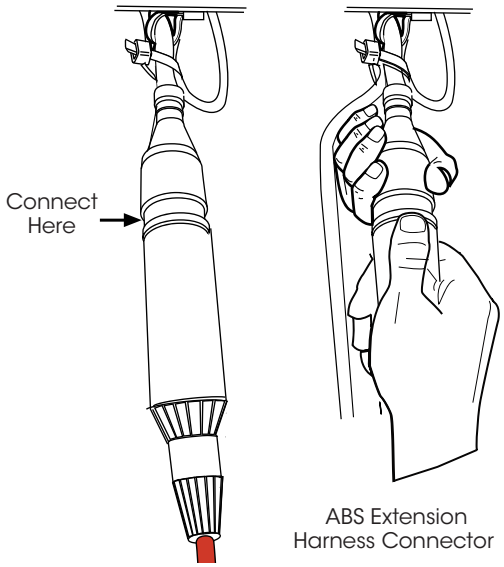

7. Match the colored wires as
shown below. Plug the three (3)male .180" bullet connectors on the Power Extension Harness (currently connected to the Gateway) into the three (3) female .180" bullet connectors on the ABS Extension Harness (currently installed on the main harness).

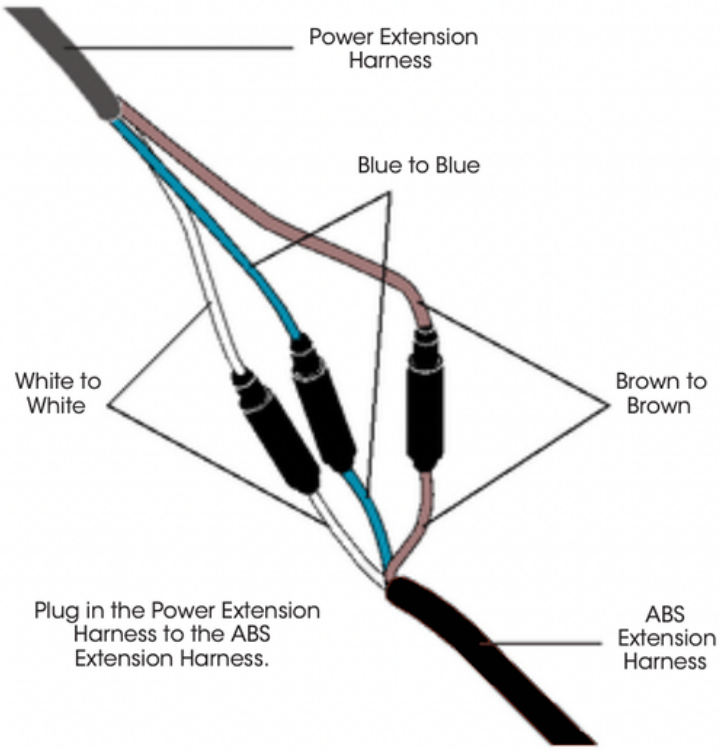

8. Secure all loose harnesses with the included cable ties. Use side cutter to cut back excess cable ties.

Notice: Once installed, do not pressure wash the device or the immediate surrounding area.

9. Power up the asset.